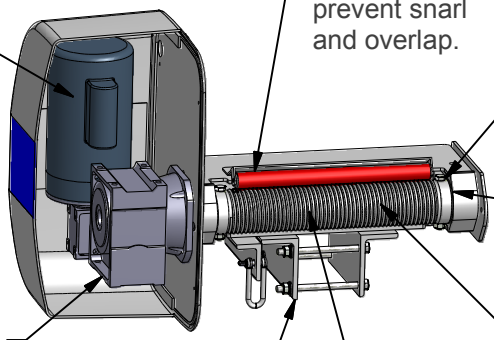

Continuous duty, high service factor electrical motor.

Roller cable keepers prevent snarl and overlap.

Engineered tribopolymer shaft bearings are lubrication and corrosion free. High load capacity provides industry best durability. These no maintenance bearings reduce service costs.

Heavy gauge high torque capacity drive tube with Gatorshield electro-plating to prevent corrosion.

Sealed maintenance free double reduction worm gearbox.

3-1/2 diameter cable friendly grooved winder extends cable life. Grooves ensure proper cable winding. Industry best standard travel of up to twenty feet.

Easy install track mount brackets require no dilling.

Stainless steel aircraft cables.

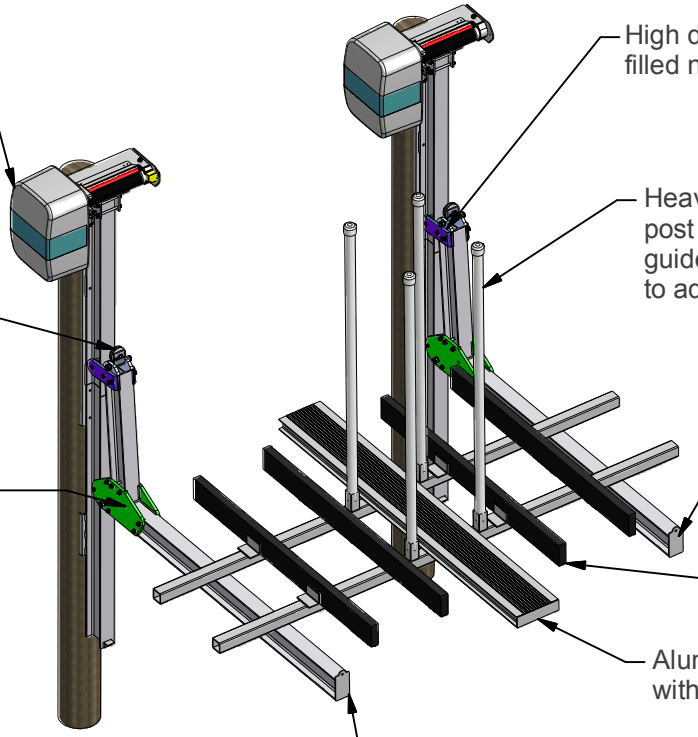

High durability molybdenum filled nylon roller wheels.

Heavy duty rotomolded covers protect mechanical and electrical components from the elements.

Heavy duty reinforced guide post base with pvc covered guide post which are easy to adjust.

Maintenace free pulleys with self-lubricatiing bearings.

Arm end plates allow for convenient attachment of boat tie downs.

Our carriage arms use heavy duty 1" thick gusset plates in this critical joint area. These gussets have CNC machined grooves to provide structural support and ensure correct geometry of the carriage arms. We weld this joint and use reinforcing bolts to construct the strongest carriages in the industry.

Fully carpeted pressure treated bunks.

Aluminum access plank with non-skid surface.

Marine grade 6061-T6 corrosion resistant aluminum and stainless steel construction. Equipped with zinc anodes to protect against electrolysis.